Olympia

CRONO
Agg. 06/11/06
Agg.23/09/10

Art. 1420/Art.BZPF
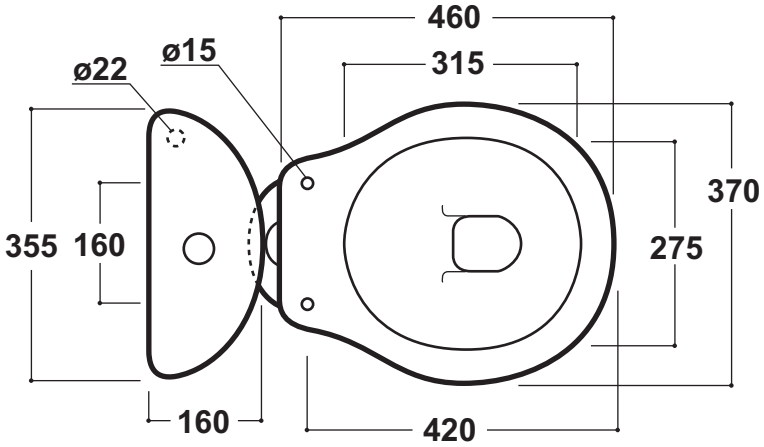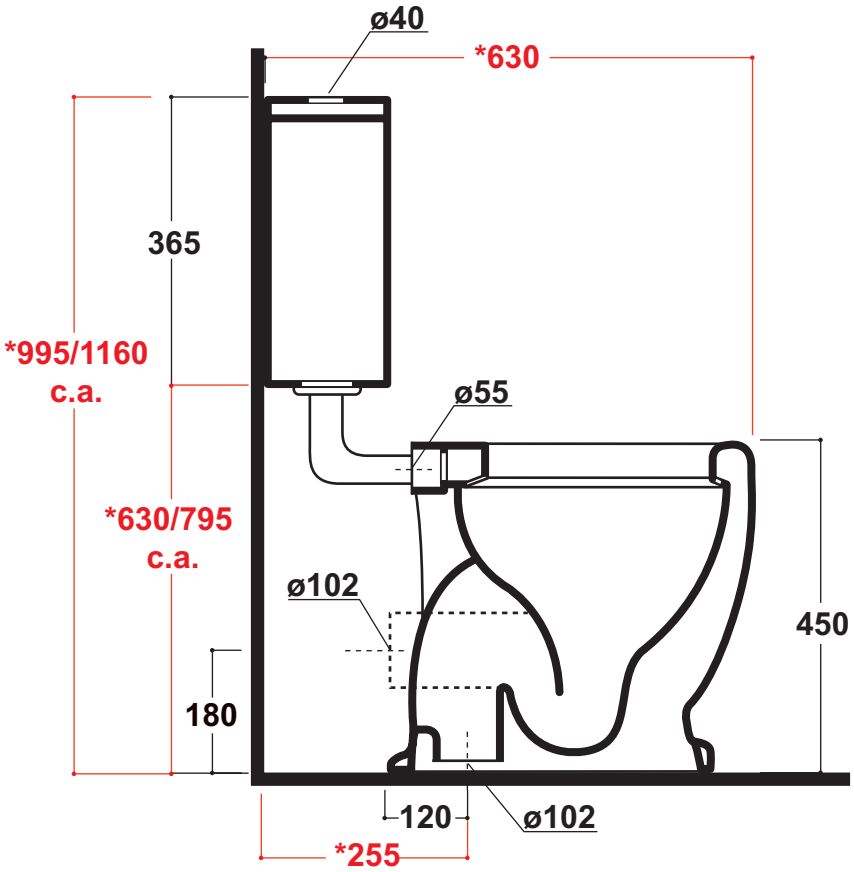
Cassetta a zaino con coperchio
Wall hung cistern with cover
Meccanismo per cassetta zaino presa fondo con tubo cromato
Mechanism for wall hung cistern botton feed with cromed pipe